90°

PE100

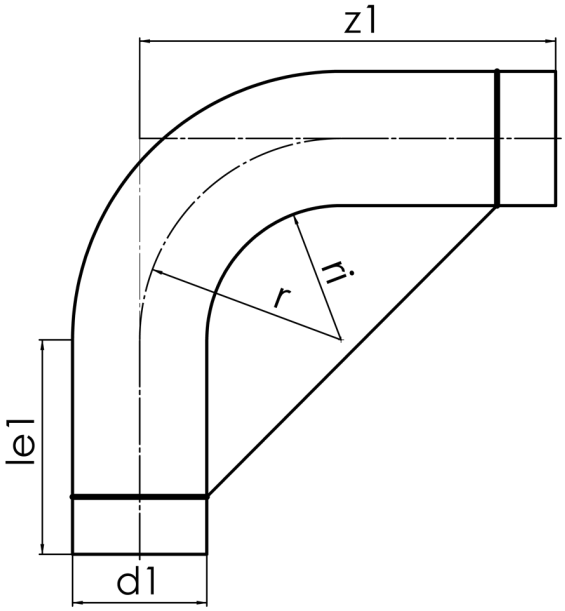

SDR 11

	d1 [mm]	le1* [mm]	z1 [mm]	r [mm]	kg
41908062	63	100	2740	1782	3,02

© STAR Piping Systems GmbH