90°

PE100

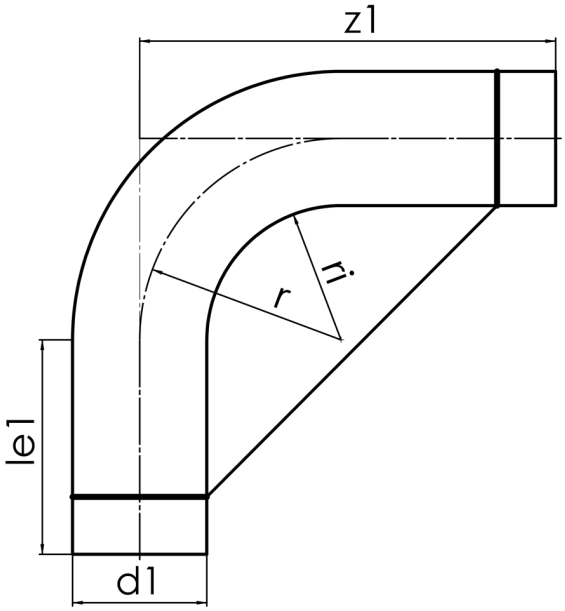

SDR 11

	d1 [mm]	le1* [mm]	z1 [mm]	r [mm]	kg
41907072	75	100	1400	1138	2,85

© STAR Piping Systems GmbH