90°

PE100

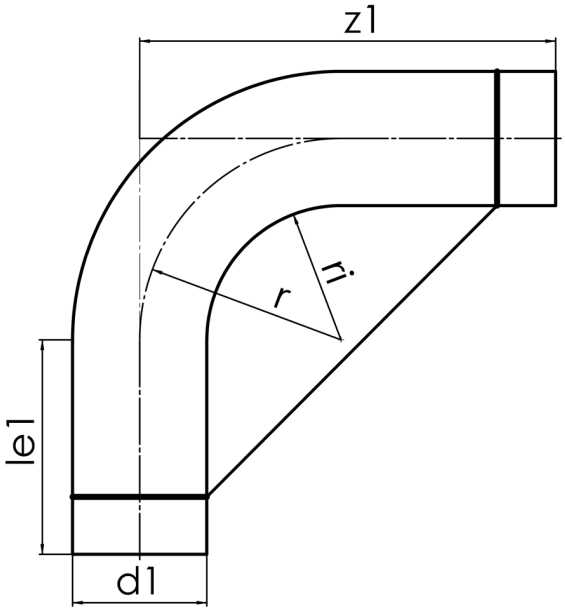

SDR 11

	d1 [mm]	le1* [mm]	z1 [mm]	r [mm]	kg
41906252	250	250	1650	825	27,04

© STAR Piping Systems GmbH