60°

PE100

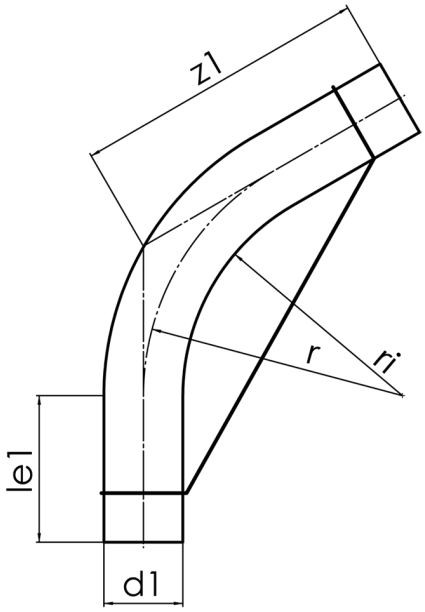

SDR 11

	d1 [mm]	le1* [mm]	z1 [mm]	r [mm]	kg
41608222	225	150	2400	1863	29,65

© STAR Piping Systems GmbH