60°

PE100

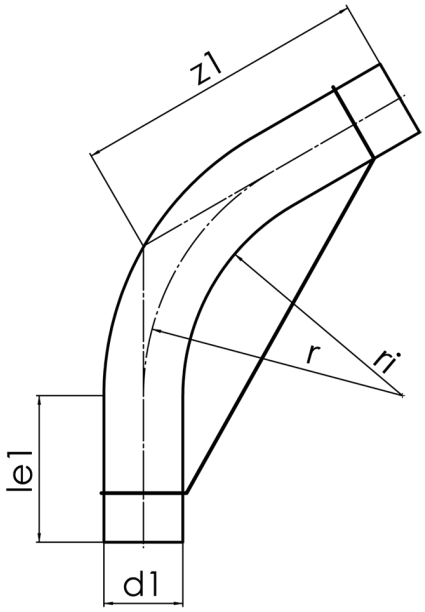

SDR 11

	d1 [mm]	le1* [mm]	z1 [mm]	r [mm]	kg
41608122	125	150	2430	1813	8,77

© STAR Piping Systems GmbH