60°

PE100

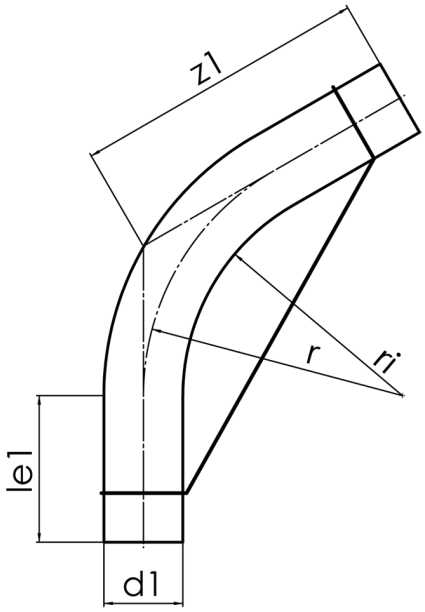

SDR 11

	d1 [mm]	le1* [mm]	z1 [mm]	r [mm]	kg
41607122	125	150	900	1163	6,13

© STAR Piping Systems GmbH