60°

PE100

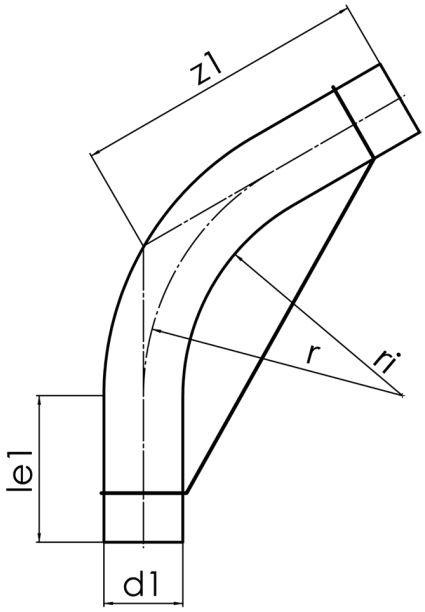

SDR 17

	d1 [mm]	le1* [mm]	z1 [mm]	r [mm]	kg
41607111	110	150	900	1155	3,22

© STAR Piping Systems GmbH