60°

PE100-RC

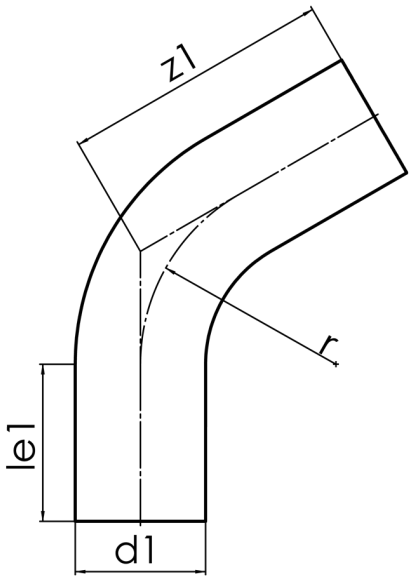

SDR 17

	d1 [mm]	le1* [mm]	z1 [mm]	r [mm]	kg
31604351	355	300	760	560	29,14

© STAR Piping Systems GmbH