90°

PP

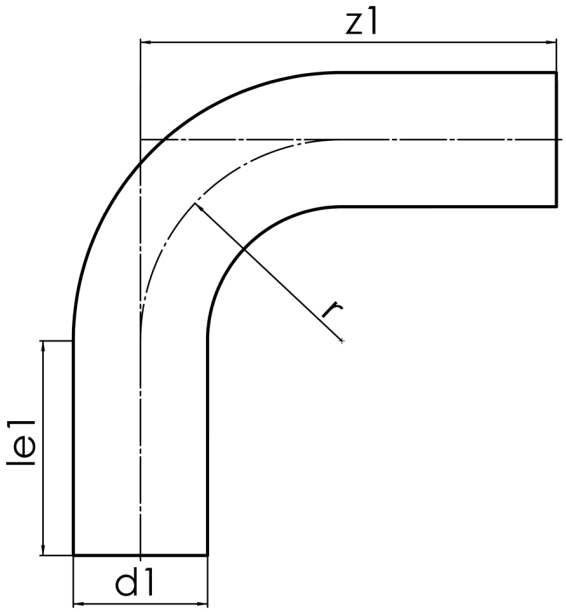

SDR 11

	d1 [mm]	le1* [mm]	z1 [mm]	r [mm]	kg
21904451	450	300	1150	711	96,73

© STAR Piping Systems GmbH